KAD32P-A, KAMD43P-A, KAD43P-A

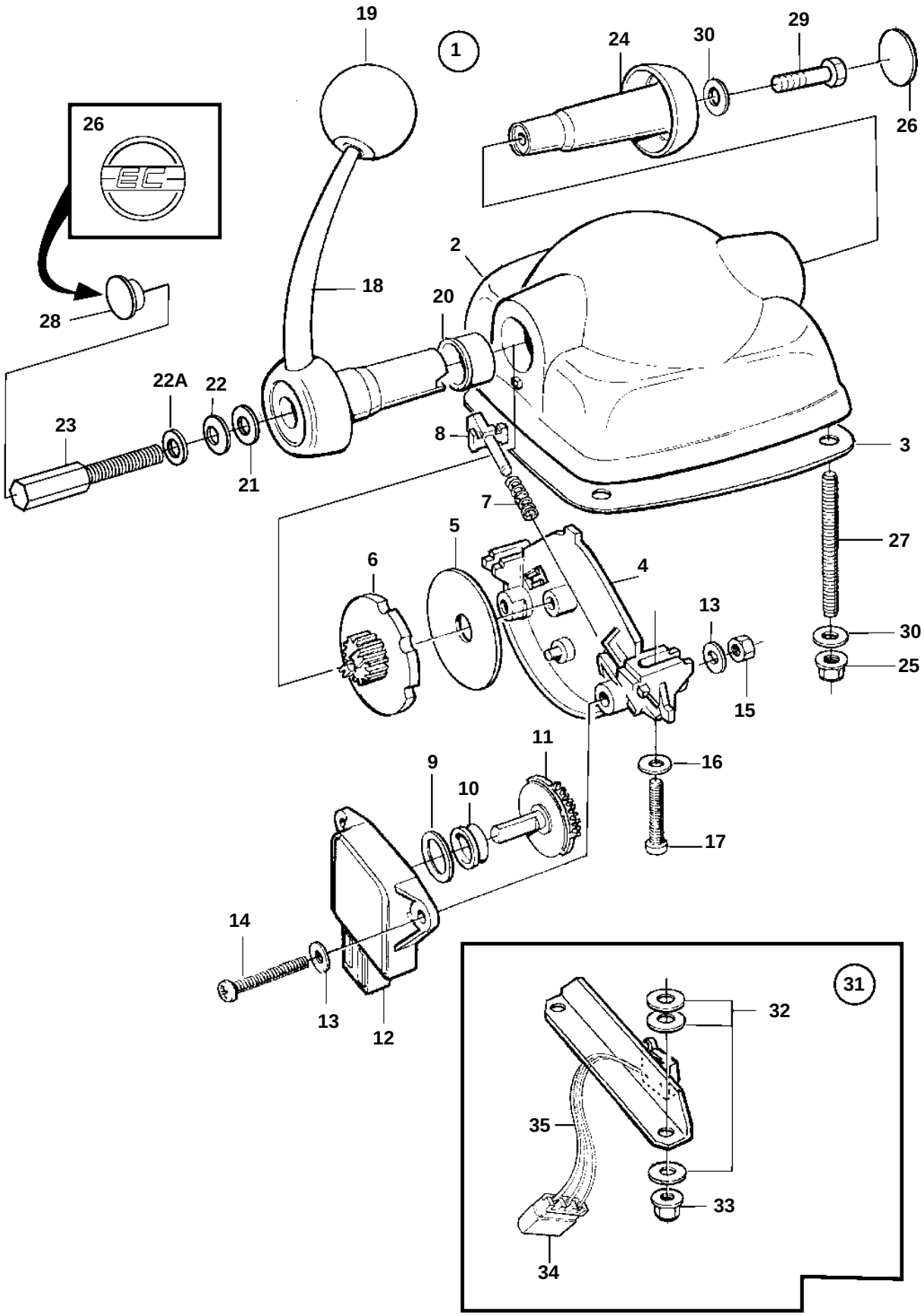

18675

KAD32P-A, KAMD43P-A, KAD43P-A

REF	PART NO.	QTY	DESCRIPTION		NOTES
1	1140658	1	Control		For twin installation.
2		1	· Control housing		
3	3581674	1	· Gasket		
4		1	· Plate		
5	3581666	2	· Washer		
6		2	· Plate		
7		2	· Spring		
8		2	· Lug		
9		2	· Spacer ring		
10	3581676	2	· Ring		
11	3581668	2	· Gear		
12	1336385	2	· Potentiometer		
13		4	· Washer		
14	3581678	2	· Screw		
15	3581680	2	· Nut		
16		2	· Washer		
17	3581681	2	· Screw		
18		2	· Lever		
19	3581675	2	· Ball		
20	3581673	2	· Bearing		
21		2	· Washer		
22		2	· Disc spring		
22A		2	· Washer		
23		2	· Adjusting screw		
25	3581686	4	· Nut		
26	3860543	2	· Decal		
27		4	· Stud		
28	3582830	2	· Plug		
30		4	· Washer		
31	873870	2	Microswitch		